# ROTOMEC

## CYCLONE RONC50

Rasaerba a 3 giranti ad asse verticale
Three spindle grooming mower
Tondeuse à 3 lames à axe vertical
3 Sichel-Rotationsmäher

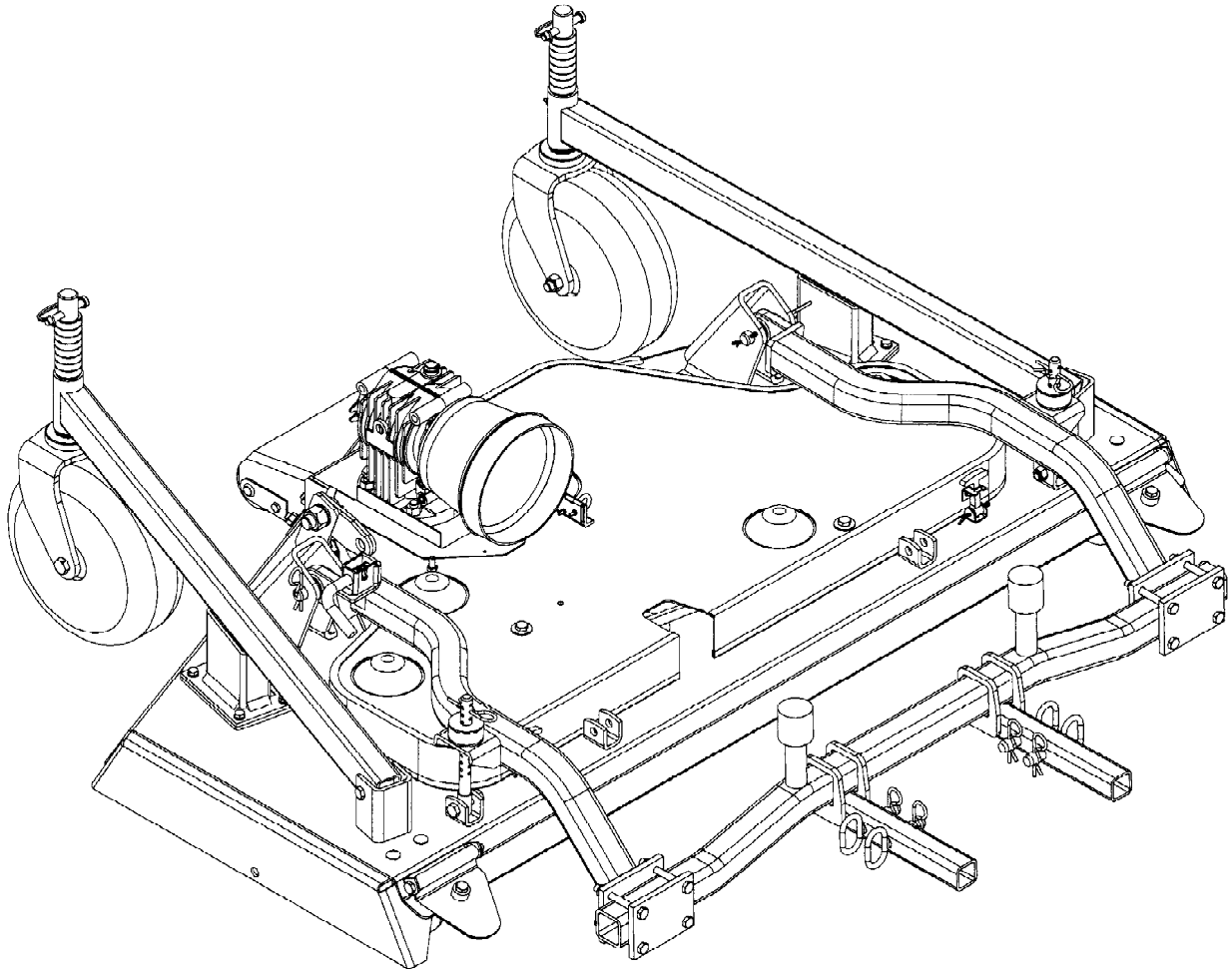

# Rotomec: Cyclone ’RONC50’

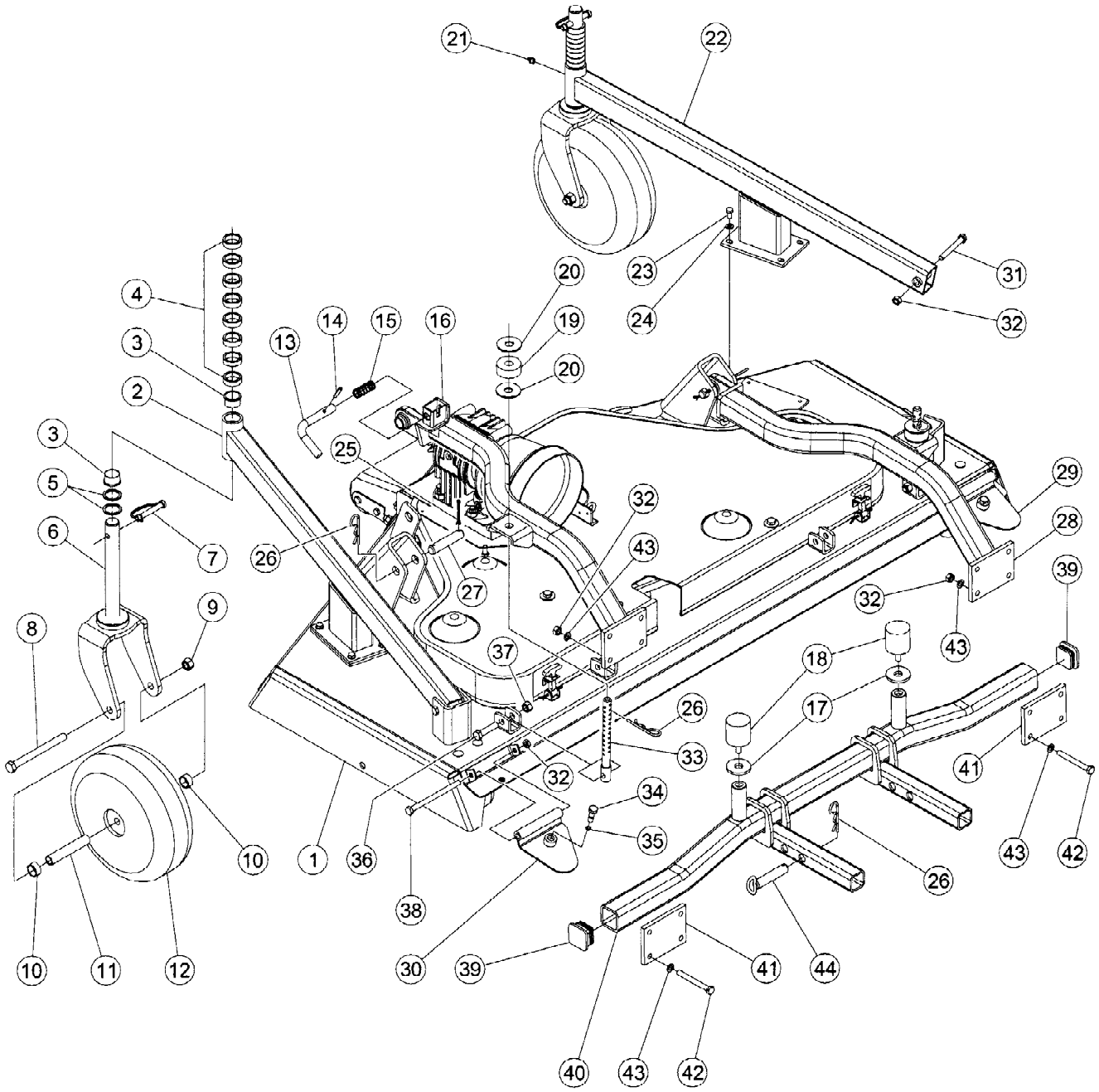

# Rotomec: Cyclone ’RONC50’

| N. | COD. | DESCRIZIONE | DESCRIPTION | DESCRIPTION | BESCHREIBUNG | N. |
|---|---|---|---|---|---|---|
| 1 | 0225010 | Telaio v.150 scarico posteriore | Frame v.150 rear discharge | Châssis v.150 éjection arrière | Heckauswurfrahmen v.150 | 1 |
| 2 | 0125470 | Braccio ruota sinistro v.150 | Left wheel arm v.150 | Bras de roue gauche v.150 | Linker Radarm v.150 | 1 |
| 3 | 0025506 | Boccola | Bushing | Douille | Büchse | 4 |
| 4 | 0025500 | Distanziale | Spacer | Entretoise | Distanzstück | 16 |
| 5 | 0025502 | Distanziale basso | Short spacer | Entretoise basse | Niedrieges Distanzstück | 4 |
| 6 | 0019460 | Forcella porta ruota | Wheel yoke | Fourche pour roue | Gabel für Rad | 2 |
| 7 | 0025504 | Spina di sicurezza | Pin | Goupille | Haltestift | 2 |
| 8 | 0006619 | Vite TE M14x150 | Bolt TE M14x150 | Vis TE M14x150 | Schraube TE M14x150 | 2 |
| 9 | 0030358 | Dado M14 | Nut M14 | Ecrou M14 | Mutter M14 | 2 |
| 10 | 0006972 | Distanziale esterno ruota pneumatica | Air tire outer wheel spacer | Entretoise externe pour roue pneumatique | Außenluftreifendistanzstück | 4 |
| 11 | 0006584 | Distanziale interno | Inner spacer | Entretoise interne | Innendistanzstück | 2 |
| 12 | 0006964 | Ruota pneumatica 11” | Air tire 11” | Roue pneumatique 11” | Luftreifen 11” | 2 |
| | 0050142 | Cuscinetto 6204-2RS per ruota pneumatica (non compare in figura) | Air tire bearing 6204-2RS (not shown) | Roulement 6204-2RS pour roue pneumatique (pas indiquée) | Luftreifenlager 6204-2RS (nicht gezeigt) | 4 |
| | 0006962 | Coperchiella per ruota pneumatica (non compare in figura) | Air tire dust cover (not shown) | Couvercle pour roue pneumatique (pas indiquée) | Luftreifendeckel (nicht gezeigt) | 4 |
| 13 | 0019565 | Perno sollevamento | Lift pin | Tourillon pour soulèvement | Abhebungzapfen | 1 |
| 14 | 0027290 | Spina elastica Ø 6x35 | Roll pin Ø 6x35 | Goupille élastique Ø 6x35 | Spannstift Ø 6x35 | 1 |
| 15 | 0019567 | Molla | Spring | Ressort | Feder | 1 |
| 16 | 0025520 | Braccio sinistro di attacco | Left hitch arm | Bras attelage gauche | Linker Anschlussarm | 1 |
| 17 | 0051776 | Rondella piana Ø11 | Flat washer Ø11 | Rondelle plate Ø11 | Flache Scheibe Ø11 | 2 |
| 18 | 0025582 | Tampone in gomma | Rubber pad | Tampon en caoutchouc | Gummistopfen | 2 |
| 19 | 0025635 | Tampone di ammortizzamento | Anti-shock pad | Tampon d'amortissement | Stoßdämpferstopfen | 2 |
| 20 | 0017354 | Rondella piana Ø16 | Flat washer Ø16 | Rondelle plate Ø16 | Flache Scheibe Ø16 | 4 |
| 21 | 0001065 | Ingrassatore M10x1 | Grease fitting M10x1 | Graisseur M10x1 | Schmiernippel M10x1 | 2 |
| 22 | 0125460 | Braccio ruota destro v.150 | Right wheel arm v.150 | Bras de roue droit v.150 | Rechter Radarm v.150 | 1 |
| 23 | 0046454 | Vite TE M8x16 | Bolt TE M8x16 | Vis TE M8x16 | Schraube TE M8x16 | 8 |
| 24 | 0019451 | Rosetta elastica Ø8 | Lock  washer Ø8 | Rondelle élastique Ø8 | Springring Ø8 | 8 |
| 25 | 0057158 | Copiglia Ø4x45 | Pin Ø4x45 | Goupille Ø4x45 | Splint Ø4x45 | 2 |
| 26 | 0091507 | Copiglia a molla Ø4 | Cotter pin Ø4 | Goupille ressort Ø4 | Federsplint Ø4 | 8 |
| 27 | 0019560 | Perno fissa bracci di attacco | Hitch arm pin | Tourillon pour bras attelage | Zapfen für Anschlussarm | 2 |
| 28 | 0025530 | Braccio destro di attacco | Right hitch arm | Bras attelage droit | Rechter Anschlussarm | 1 |
| 29 | 0119590 | Lamiera di protezione dx v.150 | Right protection v.150 | Protection droite v.150 | Rechter Schild v.150 | 1 |
| 30 | 0219590 | Lamiera di protezione sx v.150 | Left protection v.150 | Protection gauche v.150 | Linker Schild v.150 | 1 |
| 31 | 0015236 | Vite TE M10x80 | Bolt TE M10x80 | Vis TE M10x80 | Schraube TE M10x80 | 2 |
| 32 | 0030156 | Dado M10 | Nut M10 | Ecrou M10 | Mutter M10 | 12 |
| 33 | 0017351 | Perno regolazione altezza di taglio | Cutting height adjustment pin | Tourillon pour régler la hauteur de coupe | Zapfen für Schnitteinstellung | 2 |
| 34 | 0019602 | Vite fissa protezione | Protection bolt | Vis de fixage protection | Schildbefestigungschraube | 2 |
| 35 | 0019603 | Guarnizione OR | OR Gasket | Joint d'étanchéité OR | O-Ring Dichtung | 2 |
| 36 | 0030054 | Vite TE M12x50 | Bolt TE M12x50 | Vis TE M12x50 | Schraube TE M12x50 | 2 |
| 37 | 0030064 | Dado M12 | Nut M12 | Ecrou M12 | Mutter M12 | 2 |
| 38 | 0101215 | Vite TE M10x140 | Bolt TE M10x140 | Vis TE M10x140 | Schraube TE M10x140 | 2 |
| 39 | 0082760 | Tappo in plastica | Plastic cap | Bouchon d’huile | Deckel | 2 |
| 40 | 0025510 | Barra di attacco completa | Hitch rod complete | Barre pour attelage complète | Anschlußstange komplett | 1 |
| 41 | 0025522 | Piastra di attacco | Hitch plate | Plaque d’attache | Anschlußplatte | 2 |
| 42 | 0026185 | Vite TE M10x90 | Bolt TE M10x90 | Vis TE M10x90 | Schraube TE M10x90 | 8 |
| 43 | 0002034 | Rondella piana Ø10 | Flat washer Ø10 | Rondelle plate Ø10 | Flache Scheibe Ø10 | 16 |
| 44 | 0025517 | Spina di fissaggio per barra di attacco | Pin for attachment rod | Goupille de fixage pour barre attelage | Anschlußstangestift | 4 |

# Rotomec: Cyclone ’RONC50’

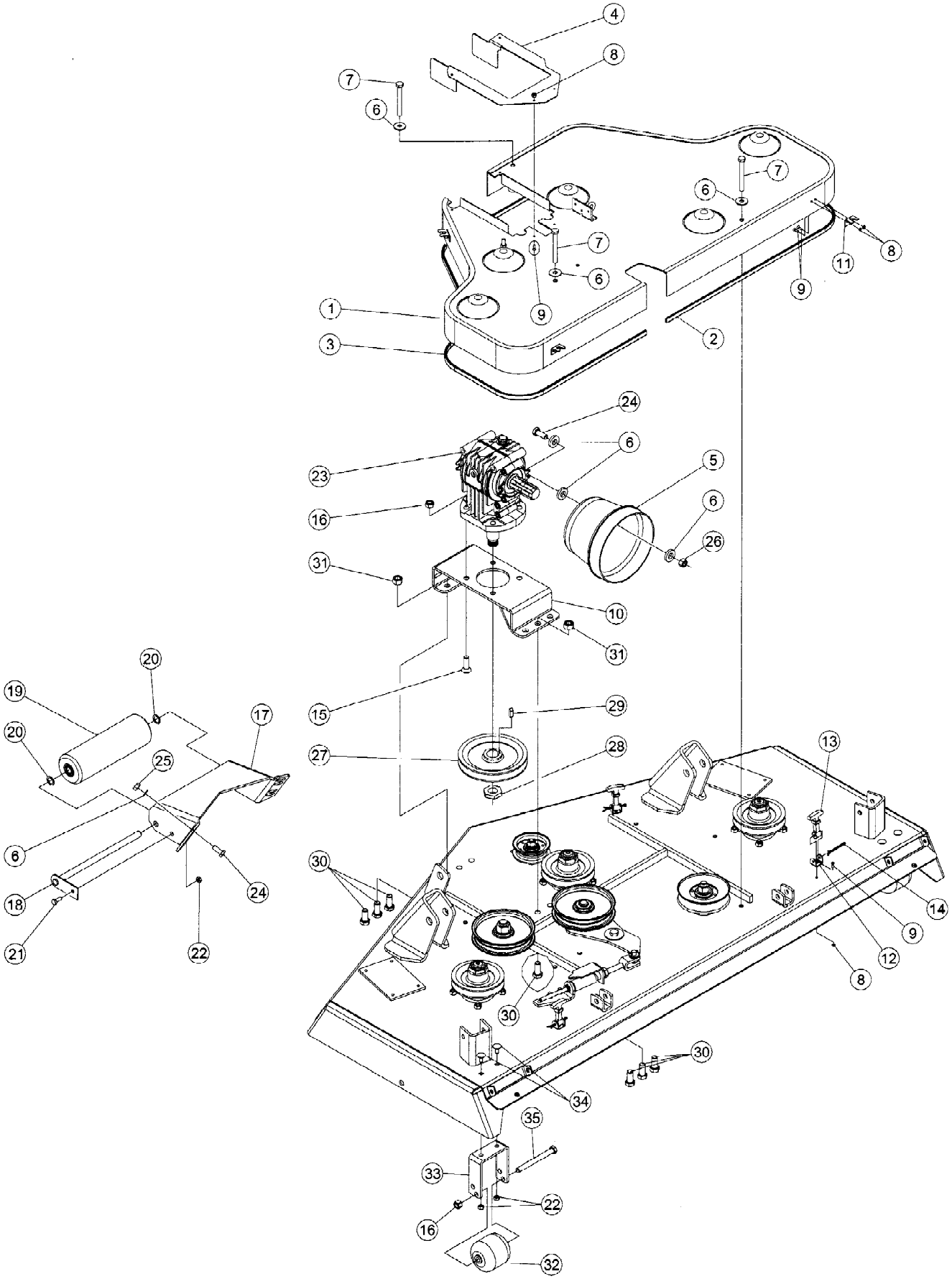

# Rotomec: Cyclone ’RONC50’

| N. | COD. | DESCRIZIONE | DESCRIPTION | DESCRIPTION | BESCHREIBUNG | N. |
|---|---|---|---|---|---|---|
| 1 | 0125340 | Lamiera copricinghia v.150 | Belt shield v.150 | Protection courroie v.150 | Riemenschutz v.150 | 1 |
| 2 | 0125362 | Profilo in gomma lungo v.150 | Long rubber strip v.150 | Bande caoutchouc longue v.150 | Langer Gummiband v.150 | 1 |
| 3 | 0125364 | Profilo in gomma corto v.150 | Short rubber strip v.150 | Bande caoutchouc courte v.150 | Kurzer Gummiband v.150 | 1 |
| 4 | 0025360 | Lamierino chiusura spacchi carter | Closing plate | Tôle de fermeture pour carter | Carterverschlußblech | 1 |
| 5 | 0008663 | Protezione cardano | Shaft protection | Protection arbre | Kardangelenkschutz | 1 |
| 6 | 0002034 | Rondella piana Ø10 | Flat washer Ø10 | Rondelle plate Ø10 | Flache Scheibe Ø10 | 13 |
| 7 | 0026185 | Vite TE M10x90 | Bolt TE M10x90 | Vis TE M10x90 | Schraube TE M10x90 | 3 |
| 8 | 0017246 | Dado M4 | Nut M4 | Ecrou M4 | Mutter M4 | 16 |
| 9 | 0017245 | Vite TS M4x14 | Bolt TS M4x14 | Vis TS M4x14 | Schraube TS M4x14 | 16 |
| 10 | 0025120 | Piastra supporto gruppo scatola | Gearbox support plate | Plaque de soutien pour boîtier | Gehäusegruppeplatte | 1 |
| 11 | 0017242 | Attacco tirante cofano mini al carter | Belt shield latch bracket | Attelage tirant capot au carter | Schutzerhaubezustange | 4 |
| 12 | 0017240 | Attacco tirante cofano mini al piatto | Deck latch braket | Attelage tirant capot au plateau | Plattenhaubezustange | 4 |
| 13 | 0017241 | Tirante cofano mini | Belt shield latch | Tirant capot | Haubezustange | 4 |
| 14 | 0112087 | Copiglia Ø4x50 | Pin Ø4x50 | Goupille Ø4x50 | Splint Ø4x50 | 4 |
| 15 | 0074183 | Vite TS M12x40 | Bolt TS M12x40 | Vis TS M12x40 | Schraube TS M12x40 | 4 |
| 16 | 0030064 | Dado M12 | Nut M12 | Ecrou M12 | Mutter M12 | 6 |
| 17 | 0025430 | Supporto rullo anteriore | Front roller support | Palier rouleau antérieur | Vorderwalzenstütze | 1 |
| 18 | 0019400 | Perno rullo | Roller pin | Tourillon rouleau | Rollenzapfen | 1 |
| 19 | 0067358 | Rullo anteriore | Front roller | Rouleau antérieur | Vordere Walze | 1 |
| 20 | 0058503 | Anello di spessoramento | Spacer washer | Anneau d'épaisseur | Distanzring | 2 |
| 21 | 0015012 | Vite TE M8x20 | Bolt TE M8x20 | Vis TE M8x20 | Schraube TE M8x20 | 1 |
| 22 | 0011328 | Dado M8 | Nut M8 | Ecrou M8 | Mutter M8 | 5 |
| 23 | 0500690 | Gruppo scatola completo | Complete gearbox | Boîtier complet | Komplette Gehäusegruppe | 1 |
| 24 | 0033176 | Vite TE M10x25 | Bolt TE M10x25 | Vis TE M10x25 | Schraube TE M10x25 | 6 |
| 25 | 0030156 | Dado M10 | Nut M10 | Ecrou M10 | Mutter M10 | 4 |
| 26 | 0001279 | Dado M10 | Nut M10 | Ecrou M10 | Mutter M10 | 2 |
| 27 | 0017460 | Puleggia SPB 160x1 | Pulley SPB 160x1 | Poulie SPB 160x1 | Riemenscheibe SPB 160x1 | 1 |
| 28 | 0006698 | Dado M25 | Nut M25 | Ecrou M25 | Mutter M25 | 1 |
| 29 | 0006639 | Linguetta 8x7x25 | Key 8x7x25 | Clavette 8x7x25 | Schlüssel 8x7x25 | 1 |
| 30 | 0032618 | Vite TE M14x30 | Bolt TE M14x30 | Vis TE M14x30 | Schraube TE M14x30 | 6 |
| 31 | 0030358 | Dado M14 | Nut M14 | Ecrou M14 | Mutter M14 | 6 |
| 32 | 0015730 | Rullo antiscalpo | Antiscalping roller | Rouleau anti-scalps | Gegen Furchenbildungwalze | 2 |
| 33 | 0019371 | Attacco rullo posteriore | Rear roller hitch | Attelage rouleau arrière | Hinterwalzenanschluß | 2 |
| 34 | 0084289 | Vite TTQST M8x20 | Bolt TTQST M8x20 | Vis TTQST M8x20 | Schraube TTQST M8x20 | 4 |
| 35 | 0091301 | Vite TE M12x120 | Bolt TE M12x120 | Vis TE M12x120 | Schraube TE M12x120 | 2 |

# Rotomec: Cyclone ’RONC50’

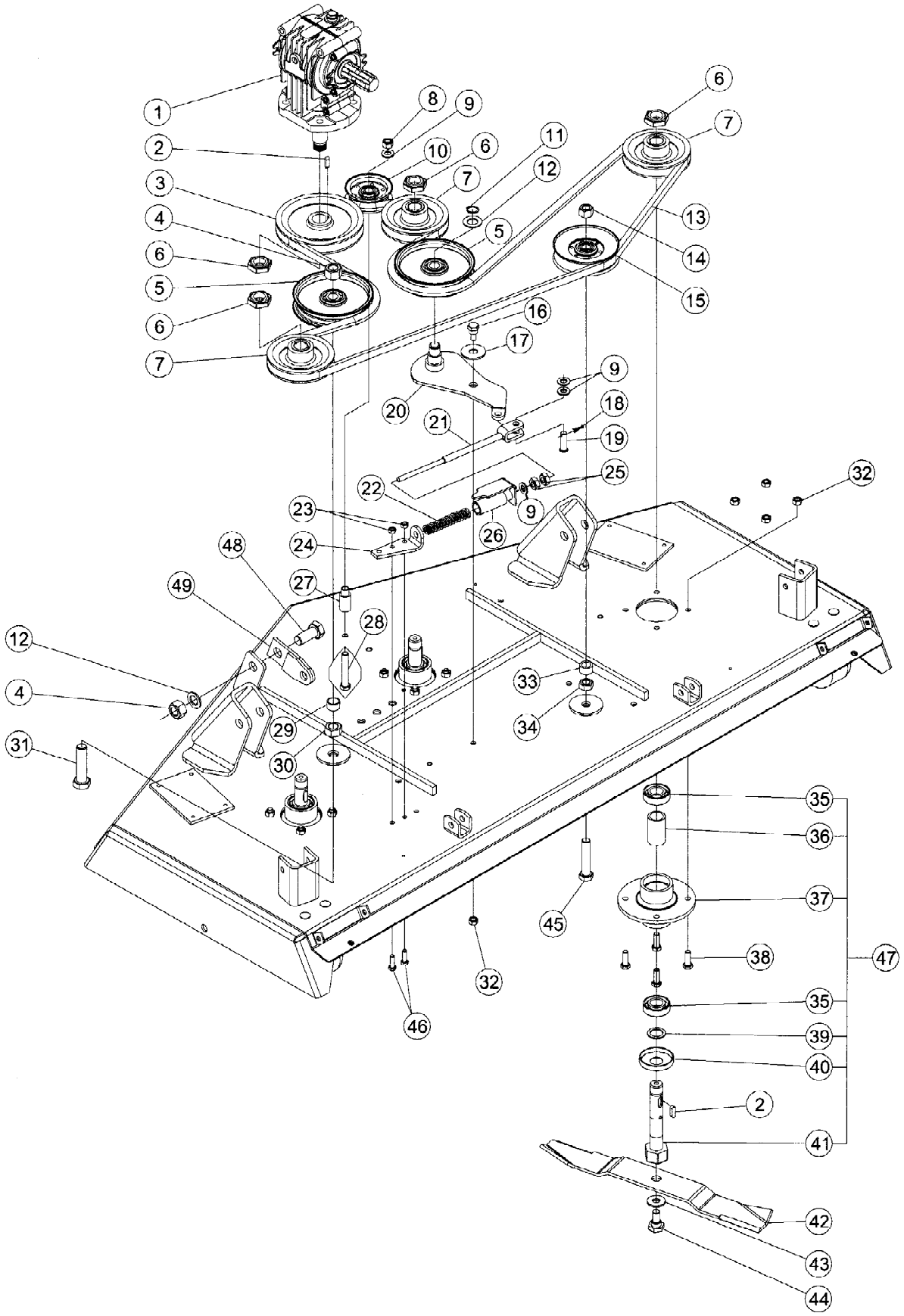

# Rotomec: Cyclone ’RONC50’

| N. | COD. | DESCRIZIONE | DESCRIPTION | DESCRIPTION | BESCHREIBUNG | N. |
|---|---|---|---|---|---|---|
| 1 | 0500690 | Gruppo scatola completo | Complete gearbox | Boîtier complet | Komplette Gehäusegruppe | 1 |
| 2 | 0006639 | Linguetta 8x7x25 | Key 8x7x25 | Clavette 8x7x25 | Schlüssel 8x7x25 | 4 |
| 3 | 0017460 | Puleggia SPB 160x1 | Pulley SPB 160x1 | Poulie SPB 160x1 | Riemenscheibe SPB 160x1 | 1 |
| 4 | 0005507 | Dado M20 | Nut M20 | Ecrou M20 | Mutter M20 | 2 |
| 5 | 0019260 | Puleggia tendicinghia | Pulley belt tensioner | Poulie tendeuse | Riemenscheibenspanner | 2 |
| 6 | 0006698 | Dado M25 | Nut M25 | Ecrou M25 | Mutter M25 | 4 |
| 7 | 0006792 | Puleggia SPB 120x1 | Pulley SPB 120x1 | Poulie SPB 120x1 | Riemenscheibe SPB 120x1 | 3 |
| 8 | 0030064 | Dado M12 | Nut M12 | Ecrou M12 | Mutter M12 | 1 |
| 9 | 0002265 | Rondella piana Ø12 | Flat washer Ø12 | Rondelle plate Ø12 | Flache Scheibe Ø12 | 4 |
| 10 | 0025300 | Puleggia tendicinghia | Pulley belt tensioner | Poulie tendeuse | Riemenscheibenspanner | 1 |
| 11 | 0050145 | Seeger esterno Ø20 | Outer snap ring Ø20 | Circlip externe Ø20 | Außenseegerring Ø20 | 1 |
| 12 | 0046555 | Rondella piana Ø20 | Flat washer Ø20 | Rondelle plate Ø20 | Flache Scheibe Ø20 | 2 |
| 13 | 0025257 | Cinghia BX128 | Belt BX128 | Courroie BX128 | Keilriemen BX128 | 1 |
| 14 | 0005581 | Dado M16 | Nut M16 | Ecrou M16 | Mutter M16 | 1 |
| 15 | 0019290 | Puleggia tendicinghia | Pulley belt tensioner | Poulie tendeuse | Riemenscheibenspanner | 1 |
| 16 | 0051751 | Vite fissa tendicinghia | Belt tensioner fixing bolt | Vis de fixage tendeur courroie | Schraube für Riemenspanner | 1 |
| 17 | 0051753 | Rondella piana Ø16 | Flat washer Ø16 | Rondelle plate Ø16 | Flache Scheibe Ø16 | 1 |
| 18 | 0016738 | Copiglia Ø3x20 | Pin Ø3x20 | Goupille Ø3x20 | Splint Ø3x20 | 1 |
| 19 | 0025324 | Perno attacco tirante | Turnbuckle hitch pin | Tourillon pour attache tirant | Zapfen für Zugbolzenanschluss | 1 |
| 20 | 0025270 | Supporto tendicinghia | Belt tensioner support | Palier tendeur courroie | Riemenspannersupport | 1 |
| 21 | 0025320 | Tirante molla completo | Complete tie rod spring | Tirant ressort complet | Kompletter Federzugbolzen | 1 |
| 22 | 0025314 | Molla | Spring | Ressort | Feder | 1 |
| 23 | 0091384 | Dado autobloccante M8 | Locking nut M8 | Ecrou autobloquant M8 | Mutter M8 | 2 |
| 24 | 0025310 | Piastra tensionamento cinghia | Belt tensioner plate | Plaque tendeur courroie | Riemenspannerplatte | 1 |
| 25 | 0001106 | Dado M12 | Nut M12 | Ecrou M12 | Mutter M12 | 2 |
| 26 | 0017216S | Indicatore molla completo | Spring rod indicator | Indicateur ressort complet | Zeigerfeder | 1 |
| 27 | 0025302 | Distanziale | Spacer | Entretoise | Distanzstück | 1 |
| 28 | 0025304 | Vite TE M12x75 | Bolt TE M12x75 | Vis TE M12x75 | Schraube TE M12x75 | 1 |
| 29 | 0019264 | Distanziale | Spacer | Entretoise | Distanzstück | 1 |
| 30 | 0005508 | Dado M20 | Nut M20 | Ecrou M20 | Mutter M20 | 1 |
| 31 | 0077779 | Vite TE M20x80 | Bolt TE M20x80 | Vis TE M20x80 | Schraube TE M20x80 | 1 |
| 32 | 0030156 | Dado M10 | Nut M10 | Ecrou M10 | Mutter M10 | 13 |
| 33 | 0019296 | Distanziale | Spacer | Entretoise | Distanzstück | 1 |
| 34 | 0003124 | Dado M16 | Nut M16 | Ecrou M16 | Mutter M16 | 1 |
| 35 | 0051706 | Cuscinetto 6205-2RS | Bearing 6205-2RS | Roulement 6205-2RS | Lager 6205-2RS | 6 |
| 36 | 0019236 | Distanziale | Spacer | Entretoise | Distanzstück | 3 |
| 37 | 0006648 | Supporto rotore | Spindle | Palier rotor | Rotorsupport | 3 |
| 38 | 0001278 | Vite TE M10x30 | Bolt TE M10x30 | Vis TE M10x30 | Schraube TE M10x30 | 12 |
| 39 | 0006606 | Anello di spessoramento | Spacer washer | Anneau d'épaisseur | Distanzring | 3 |
| 40 | 0006636 | Coperchiella | Cover | Couvercle | Deckel | 3 |
| 41 | 0019234 | Albero porta coltello | Spindle shaft | Arbre porte couteau | Messerwelle | 3 |
| 42 | 0006641 | Coltello v.150 | Blade v.150 | Couteau v.150 | Messer v.150 | 3 |
| 43 | 0008560 | Molla a tazza | Spring washer | Ressort à disque | Tellerfeder | 3 |
| 44 | 0006659 | Vite fissa coltello | Blade bolt | Vis de fixage couteau | Messerbefestigungschraube | 3 |
| 45 | 0019294 | Vite TE M16x80 | Bolt TE M16x80 | Vis TE M16x80 | Schraube TE M16x80 | 1 |
| 46 | 0091446 | Vite TE M8x25 | Bolt TE M8x25 | Vis TE M8x25 | Schraube TE M8x25 | 2 |
| 47 | 0019231 | Gruppo rotore | Spindle assembly | Groupe de rotor | Rotorgruppe | 3 |
| 48 | 0009538 | Vite TE M20x45 | Bolt TE M20x45 | Vis TE M20x45 | Schraube TE M20x45 | 1 |
| 49 | 0025125 | Piastra blocco macchina in alzata | Locking plate | Plaque de blocage pour soulèvement | Abhebungshalteplatte | 1 |

# Rotomec: Cyclone ’RONC50’

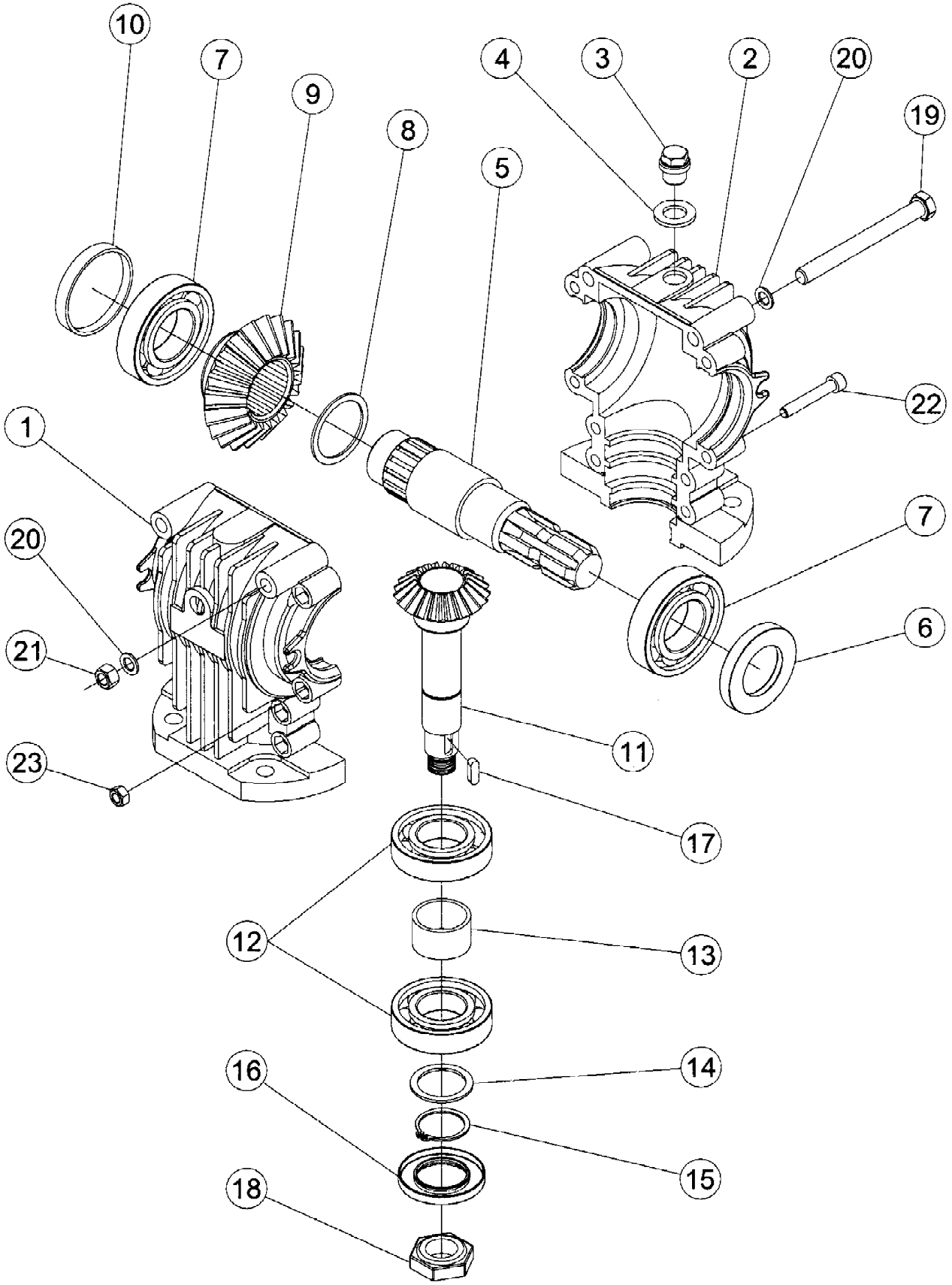

# Rotomec: Cyclone ’RONC50’

| N. | COD. | DESCRIZIONE | DESCRIPTION | DESCRIPTION | BESCHREIBUNG | N. |
|---|---|---|---|---|---|---|
| 1 | 0051896 | Semiscatola senza foro | Gearbox housing without hole | Demi-boîtier sans trou | Gehäusehälfte ohne Bohrung | 1 |
| 2 | 0051897 | Semiscatola con foro | Gearbox housing with hole | Demi-boîtier avec trou | Gehäusehälfte mit Bohrung | 1 |
| 3 | 0010177 | Sfiatatoio | Breather cap | Bouchon d'huile | Gehäuseentlüfter | 1 |
| 4 | 0008601 | Guarnizione | Gasket | Joint d'étanchéité | Dichtung | 1 |
| 5 | 0008892 | Albero P.D.F. | Input shaft | Arbre P.D.F. | Zapfwelle | 1 |
| 6 | 0010192 | Paraolio 40.68.10 | Oil seal 40.68.10 | Pare-huile 40.68.10 | Simmering 40.68.10 | 1 |
| 7 | 0012149A | Cuscinetto 6208 | Bearing 6208 | Roulement 6208 | Lager 6208 | 2 |
| 8 | 0053240 | Anello di spessoramento 45x55x2 | Spacer washer 45x55x2 | Anneau d'épaisseur 45x55x2 | Distanzring 45x55x2 | 1 |
| 9 | 0025145 | Corona conica | Ring gear | Couronne conique | Tellerrad | 1 |
| 10 | 0008609 | Tappo | Cap | Bouchon d'huile | Deckel | 1 |
| 11 | 0025150 | Pignone conico | Pinion gear | Pignon conique | Kegelrad | 1 |
| 12 | 0025332A | Cuscinetto 6207 | Bearing 6207 | Roulement 6207 | Lager 6207 | 2 |
| 13 | 0010196 | Distanziale | Spacer | Entretoise | Distanzstück | 1 |
| 14 | 0034196 | Anello di spessoramento 35x45x2.5 | Spacer washer 35x45x2.5 | Anneau d'épaisseur 35x45x2.5 | Distanzring 35x45x2.5 | 1 |
| 15 | 0042122 | Seeger esterno Ø35 | Outer snap ring Ø35 | Circlip externe Ø35 | Außenseegerring Ø35 | 1 |
| 16 | 0002295 | Paraolio 36-62-10 | Oil seal 36-62-10 | Pare-huile 36-62-10 | Simmering 36-62-10 | 1 |
| 17 | 0006639 | Linguetta 8x7x25 | Key 8x7x25 | Clavette 8x7x25 | Schlüssel 8x7x25 | 1 |
| 18 | 0006698 | Dado M25 | Nut M25 | Ecrou M25 | Mutter M25 | 1 |
| 19 | 0015263 | Vite TE M10x120 | Bolt TE M10x120 | Vis TE M10x120 | Schraube TE M10x120 | 2 |
| 20 | 0002034 | Rondella piana Ø10 | Flat washer Ø10 | Rondelle plate Ø10 | Flache Scheibe Ø10 | 4 |
| 21 | 0030156 | Dado M10 | Nut M10 | Ecrou M10 | Mutter M10 | 2 |
| 22 | 0010171 | Vite TCEI M8x50 | Bolt TCEI M8x50 | Vis TCEI M8x50 | Schraube TCEI M8x50 | 8 |
| 23 | 0001806 | Dado M8 | Nut M8 | Ecrou M8 | Mutter M8 | 8 |
| | 0500690 | Gruppo scatola | Gearbox | Boîtier | Gehäusegruppe | |

# Rotomec: Cyclone ’RONC50’

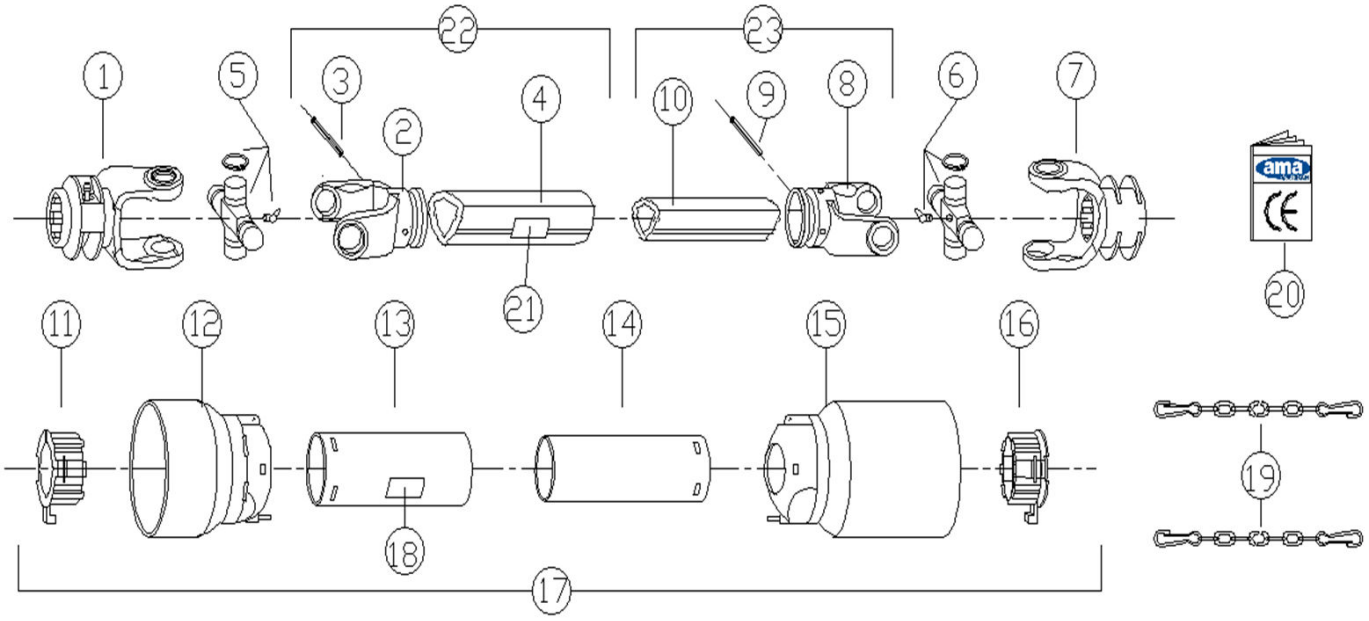

# Rotomec: Cyclone ’RONC50’

| N. | COD. | DESCRIZIONE | DESCRIPTION | DESCRIPTION | BESCHREIBUNG | N. |
|---|---|---|---|---|---|---|
| 1 | 1002122A | Forcella P.D.F. | PTO Yoke | Fourche P.D.F. | Aufsteckgabel | 1 |
| 2 | 1902010A | Forcella tubo esterno | Female yoke | Fourche femelle | Außenrohrgabel | 1 |
| 3 | 0008679 | Spina elastica Ø8x55 | Roll pin Ø8x55 | Goupille élastique Ø8x55 | Spannstift Ø8x55 | 1 |
| 4 | 3020512A | Tubo esterno | Outer tube | Tube externe | Außenrohr | 1 |
| 5 | 1802010A | Crociera | Cross & Bearing | Croisillon | Kreuzgelenk | 1 |
| 6 | 1802010A | Crociera | Cross & Bearing | Croisillon | Kreuzgelenk | 1 |
| 7 | 1002138A | Forcella P.D.F. | PTO Yoke | Fourche P.D.F. | Aufsteckgabel | 1 |
| 8 | 1902012A | Forcella tubo interno | Male Yoke | Fourche mâle | Innenrohrgabel | 1 |
| 9 | 0008679 | Spina elastica Ø8x55 | Roll pin Ø8x55 | Goupille élastique Ø8x55 | Spannstift Ø8x55 | 1 |
| 10 | 3120512A | Tubo interno | Inner tube | Tube interne | Innenrohr | 1 |
| 11 | 6002010A | Anello tubo esterno | Outer locking ring | Anneau tube externe | Außenrohrring | 1 |
| 12 | 6014010A | Cuffia di protezione lato trattore | Tractor side guard cone | Coiffe de protection pour côté tracteur | Schutztopf für Traktorseite | 1 |
| 13 | 5820452EA | Tubo protezione esterna | Female tube shield | Tube protection femelle | Außenschutzrohr | 1 |
| 14 | 5820452IA | Tubo protezione interna | Male tube shield | Tube protection mâle | Innenschutzrohr | 1 |
| 15 | 6014012A | Cuffia di protezione lato macchina solo “CE” | Machine side guard cone only “CE” | Coiffe de protection pour côté machine seulement “CE” | Schutztopf für Maschinenseite nur “CE” | 1 |
| 16 | 6002012A | Anello tubo interno | Inner locking ring | Anneau tube interne | Innenrohrring | 1 |
| 17 | P22064SSA | Protezione completa | Complete shielding | Protection complète | Kompletter Schutz | 1 |
| 18 | 8900103A | Adesivo esterno solo “CE” | Outer decal only “CE” | Autocollant extérieur seulement “CE” | Außerer Aufkleber nur “CE” | 1 |
| 19 | 5990030A | Catenella | Chain | Chaîne | Kette | 2 |
| 20 | 8909090A | Manuale di istruzioni “CE” | Operator’s manual “CE” | Livret d’entretien et d’utilisaton “CE” | Bedienungs- und Wartungsanleitung “CE” | 1 |
| 21 | 8900201A | Adesivo interno | Inner decal | Autocollant intérieur | Innerer Aufkleber | 1 |
| 22 | Z020512A | Tubo esterno completo | Outer tube complete | Tube externe complet | Außenrohr komplett | 1 |
| 23 | Z120512A | Tubo interno completo | Inner tube complete | Tube interne complet | Innenrohr komplett | 1 |
| | 0500106 | Cardano | PTO shaft | Arbre à cardan | Kardangelenk | |

# Rotomec: Cyclone ’RONC50’

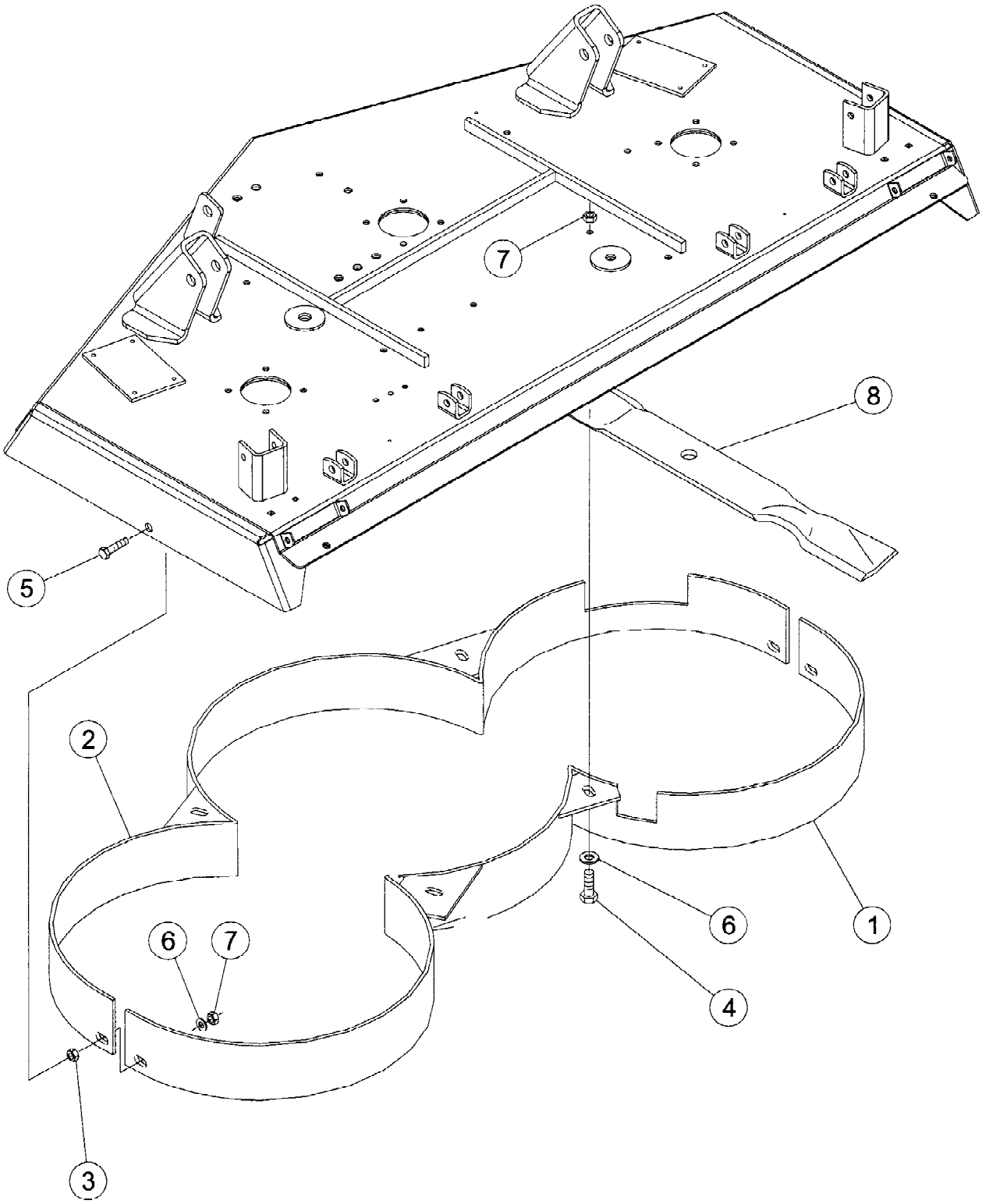

# Rotomec: Cyclone ’RONC50’

| N. | COD. | DESCRIZIONE | DESCRIPTION | DESCRIPTION | BESCHREIBUNG | N. |
|---|---|---|---|---|---|---|
| 1 | 0006777 | Convogliatore v.150 | Baffling v.150 | Convoyeur v.150 | Förderer v.150 | 1 |
| 2 | 0006783 | Convogliatore v.150 | Baffling v.150 | Convoyeur v.150 | Förderer v.150 | 1 |
| 3 | 0003038 | Dado M12 | Nut M12 | Ecrou M12 | Mutter M12 | 2 |
| 4 | 0006349 | Vite TE M10x20 | Bolt TE M10x20 | Vis TE M10x20 | Schraube TE M10x20 | 4 |
| 5 | 0091281 | Vite TE M10x35 | Bolt TE M10x35 | Vis TE M10x35 | Schraube TE M10x35 | 2 |
| 6 | 0030157 | Rondella piana Ø10 | Flat washer Ø10 | Rondelle plate Ø10 | Flache Scheibe Ø10 | 6 |
| 7 | 0030156 | Dado M10 | Nut M10 | Ecrou M10 | Mutter M10 | 6 |
| 8 | 0006641M | Coltello sminuzzatore v.150 | Mulching blade v.150 | Couteau hacheur v.150 | Hackmesser v.150 | 3 |